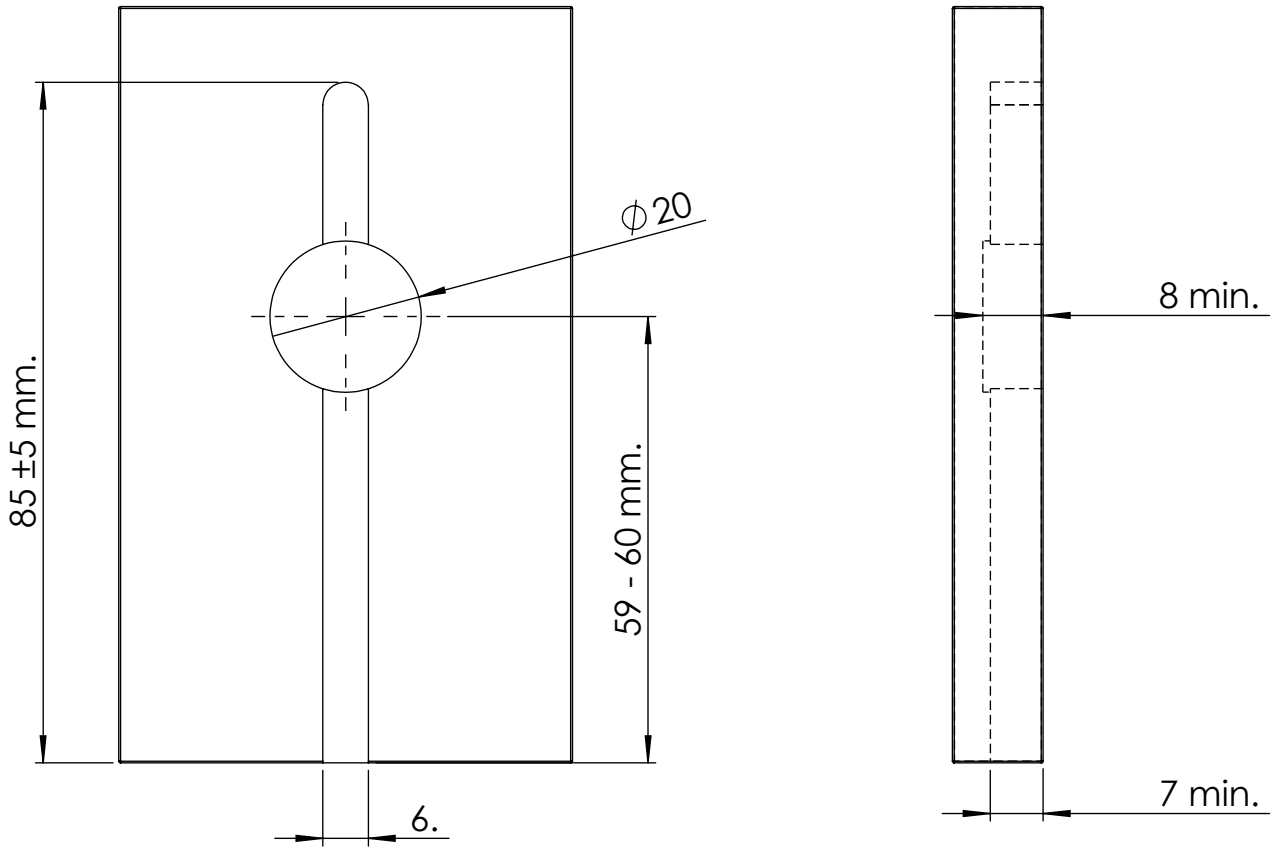
ϕ20
85 ±5 mm.
59 - 60 mm.
6.
8 min.
7 min.

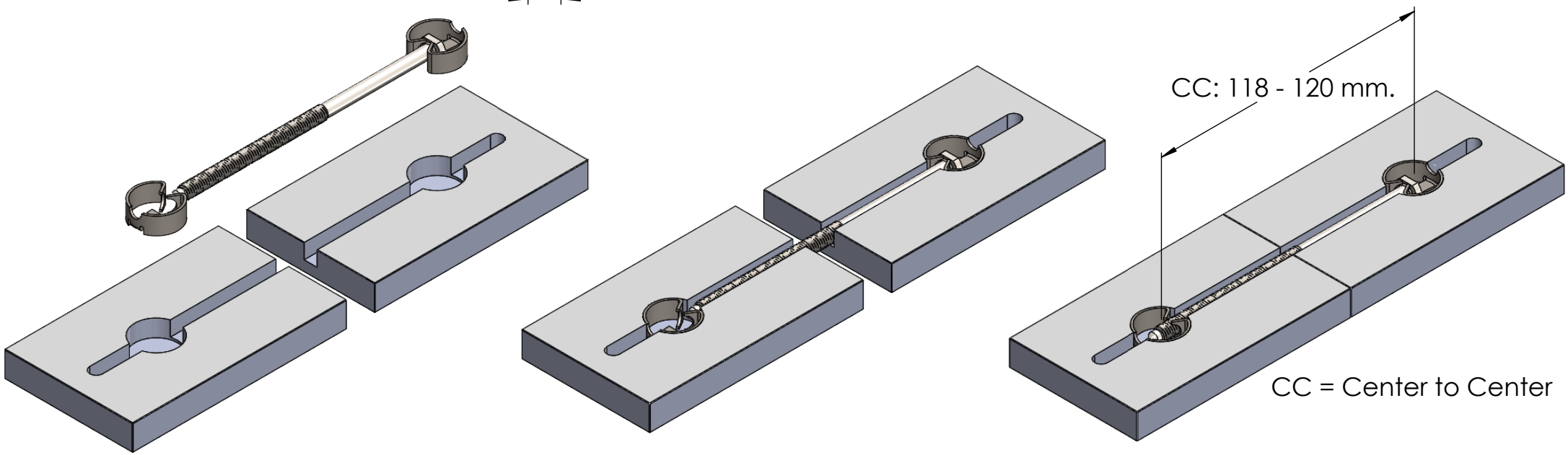
CC: 118 - 120 mm.
CC = Center to Center